Installation/Operating Instructions

Orbiter by Draper

These Installation/Operating Instructions are available in the official language of the country where you purchase the product. Please contact your distributor to request a copy.
Vous pourriez demander les instructions d'installation et d'opération traduises dans la langue officielle du pays ou vous achetez le produit. Veuillez demander à votre distributeur.
Die Gebrauchsanweisung für Installation und Konstruktion sind in der offiziellen Sprache des Landes, indem Sie das Produkt gekauft haben, vorhanden. Fragen Sie die jeweilige Verkaufs-Abteilung.

⚠Caution

① Read instructions completely before proceeding.
② Follow instructions carefully. Installation contrary to instructions invalidates warranty.
③ Do not obstruct operation of Orbiter with fingers or any object. Serious injury or damage could result.
④ Entire bottom of unit must be unobstructed to permit proper operation.
⑤ Unit operates on 12V DC.
⑥ Unit must be installed by qualified personnel.

Note: *Unit has been thoroughly inspected and tested at factory and found to be operating properly prior to shipment.*

Planning

① Based on screen location and projector specifications, determine proper position for projector installation.
② Confirm that there is adequate space for installation and operation.
③ Arrange to provide service access to the unit.
④ Space required above unit is the same with or without Environmental Air Space Housing.
⑤ When installed with Environmental Air Space Housing unit is suitable for use in an environmental air space in accordance with in accordance with Section 300.22(C) of the National Electrical Code, and Section 2-128, 12-010(3) and 12-100 of the Canadian Electrical Code, Part 1, CSA C22.1.
⑥ Total capacity of lift is 26 lbs (11.8 kg), including projector and closure panel.

As Soon As Orbiter Arrives

① Open carton and inspect for damage.
② Locate the following parts:
A. The unit itself
B. Controls
C. Any optional equipment
③ Test unit before installing.

Hanging Unit

The Orbiter is provided with four (4) mounting points for suspending the unit from above. The unit should be guy wired or blocked to prevent swinging. All installations should observe the following guidelines:

① Installer must ensure that all fasteners and supports are of adequate strength to securely support Orbiter and projector. It is recommended that hardware structure be able to hold at least four times the combined weight of the lift and projector.
② Fastening methods must be suitable for mounting surface, and securely anchored so that vibration or abusive pulling on unit will not weaken installation.
③ Bottom of unit must be unobstructed after installation. Sufficient clearance must be allowed below projector.
④ Do not use unit to support adjacent ceiling, light fixtures, etc.
⑤ Do not complete the ceiling below unit until electrical connections have been completed and unit has been operated successfully.

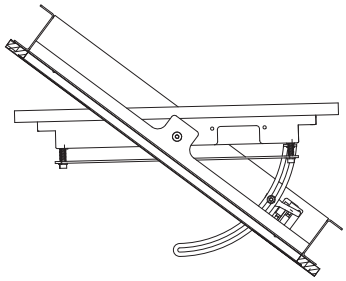

Angled Ceiling Adapter

For installing the Orbiter in an angled ceiling, use the optional Angled Ceiling Adapter. Instructions for installing the adapter can be found in the Angled Ceiling Adapter kit. Once the adapter is installed, return to the Orbiter instructions and complete installation of the Orbiter. This allows the Orbiter to be installed to a maximum of 90°.

Electrical Connections

Unit operates on 12V DC.
The Orbiter is shipped closed
Please note: Make sure electrical supply has been disconnected before attempting to connect Orbiter to electricity.
Orbiter must be installed in accordance with the requirements of the Local Building Codes, the Canadian Electrical Code (CEC), CAN/CSA C22.1 and the National Electric Code(NEC), NFPA 70. All operating switches should be "off" before power is connected.
110V or 220V AC for projector must be supplied by others. Orbiter should be operated and checked prior to installing projector.

Operation

Unit is automatically supplied with a double pole double throw switch. When unit is first operated, be cautious! If unit fails to operate when the switch is flipped "down", return switch to "off" and recheck electrical connections before proceeding. Cycle unit down and up several times to confirm satisfactory operation.
Optional DC Motor Control (Not CE Approved)—Optionally available to allow remote control, RS232 or Ethernet connection.
Optional Infrared or Radio Frequency Remote Control (Not CE Approved)—If ordered, a three-button transmitter is provided, with "up", "down", and "stop" buttons. Unit starts opens or closes when appropriate button is pressed, and may be stopped by pressing "off" button. When using RF or IR control, a three-button up-stop-down wall switch is also recommended and optionally available. DC Motor Control required.*
Optional RS232/Ethernet (Not CE Approved)—Serial communication and network communication optionally available with wall switches, RF or IR remote. When using RS232 or Ethernet control, a three-button up-stop-down wall switch is also recommended and optionally available. DC Motor Control required.*
**** Please Note: If unit is being operated using RF, IR, RS232 or Ethernet, but you still wish to have a wall switch, the standard double pole, double throw switch provided with the lift will not work. You must use the optional three-button up-stop-down switch.***

Orbiter Operation

Closed

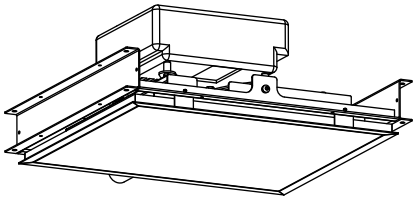

Rotating

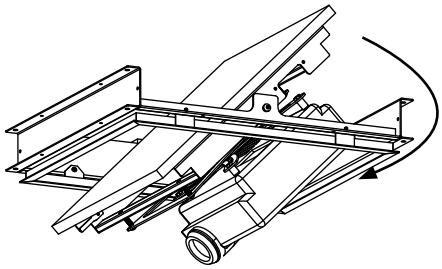

Open

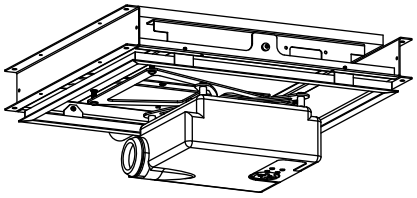

411 S. Pearl St., Spiceland, IN 47385 USA ▮ 765-987-7999
www.draperinc.com ▮ fax 765-987-7142

Copyright © 2012 Draper Inc. Form Orbiter_Inst12 Printed in U.S.A.

If you encounter any difficulties installing or servicing your Orbiter, call your dealer or Draper, Inc. in Spiceland, Indiana, 765-987-7999, or fax 765-987-7142. Outside the United States, fax (765) 987-1689.

Orbiter—Dimensions

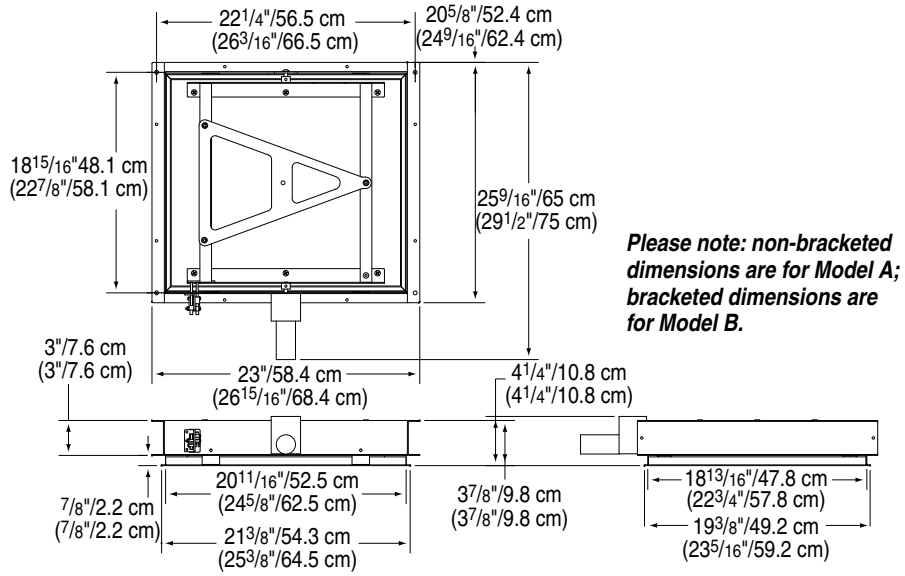

Please note: non-bracketed dimensions are for Model A; bracketed dimensions are for Model B.

Orbiter with Environmental Air Space Housing—Dimensions

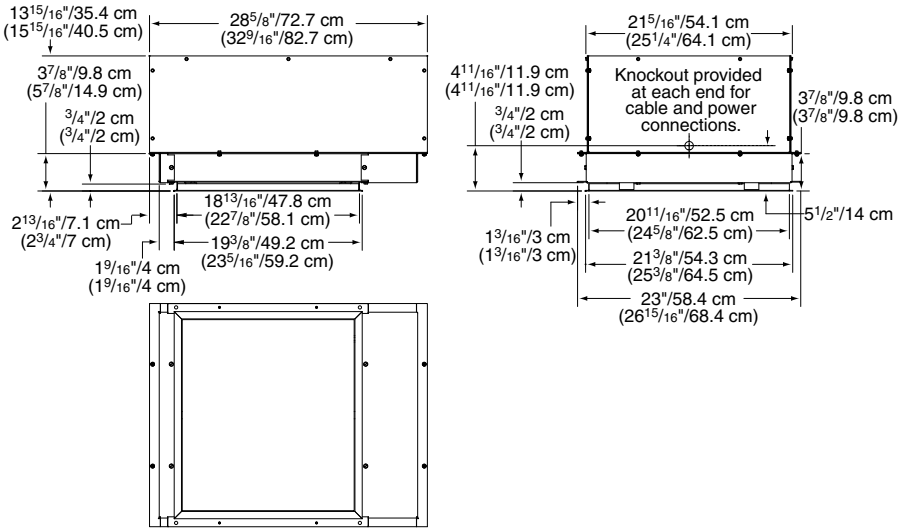

Orbiter with Environmental Air Space Housing—Exploded View

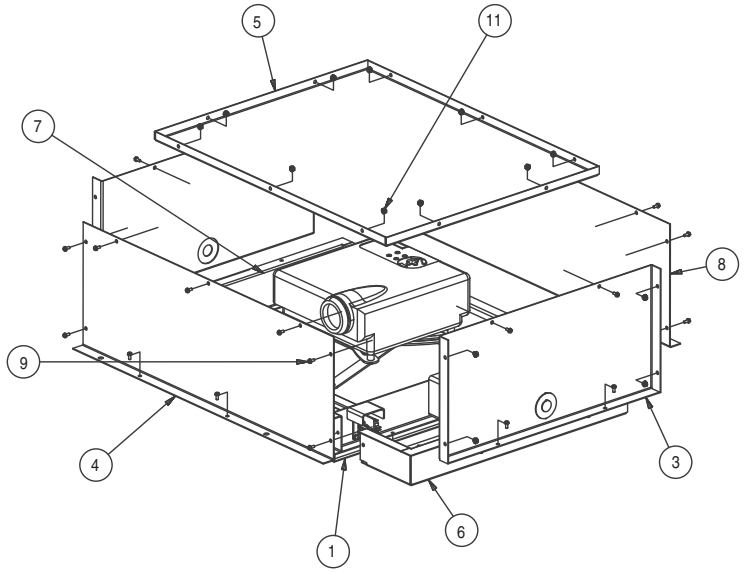

Item	Quantity	Description
1	1	Orbiter
2	1	Orbiter Environmental Air Space Housing (individual pieces listed below)
3	2	End Environmental Air Space Housing Panel
4	1	Front Environmental Air Space Housing Panel
5	1	Top Environmental Air Space Housing Panel
6	1	Lower Large Environmental Air Space Housing Panel
7	1	Lower Small Environmental Air Space Housing Panel
8	1	Rear Side Environmental Air Space Housing Panel
9	26	#8-32 x.375 (9.5 mm) Zinc Hex Head Screw/Washer
10	8	#10-32 x.375 (9.5 mm) Zinc Hex Head Screw/Washer
11	26	#8-32 Zinc Keps Nut

Projector Installation

The Orbiter uses a universal projector mount system. The parts kit contains:

-2 x long arms
-4 x short arms
-4 x M3, 4 x M4, 4 x M5 and 4 x M6 mounting bolts (30mm in length)
-4 spacers (1/2" [12.7], 5/8" [15.875], 3/4" [19.05], 7/8" [22.225 mm])

① Determine which size mounting bolts suit your projector, and set others aside. They are no longer required. If your projector has only three mounting holes, set aside one of the skyhook arms.
② Assemble the universal mount (see diagram at right) using arms appropriate to projector. Spread out the arms so each end is over one of the mounting holes.
③ Connect universal mount to Projector. Fit the 1/2" (12.7 mm) spacer under the lowest arm, the 5/8" (15.875 mm) under the next arm and so on. If the projector base is uneven, you may use combinations of spacers and arms to ensure the triangular plate is horizontal.
④ Do not tighten any bolts yet.
⑤ Move the position of the triangular plate over the centre of the projector, with the edge with the two holes towards the front (lens).
⑥ Tighten the mounting bolts. The projector and universal mount are ready to be installed to the Orbiter.
⑦ Open the Orbiter and bolt the triangular projector plate to the underside of the Orbiter using the supplied ¼" (6.35 mm)-20 bolts and springs. These bolts will also give you Roll and Tilt adjustment to align your image on the screen, while the center 5/16" (8 mm) bolt provides Yaw adjustment. The springs will ensure that the projector is held still during motion. Do not install the projector plate without springs.

Please Note: Projector can be installed either parallel or perpendicular to the pivot axis of the Orbiter, as long as projector is small enough.

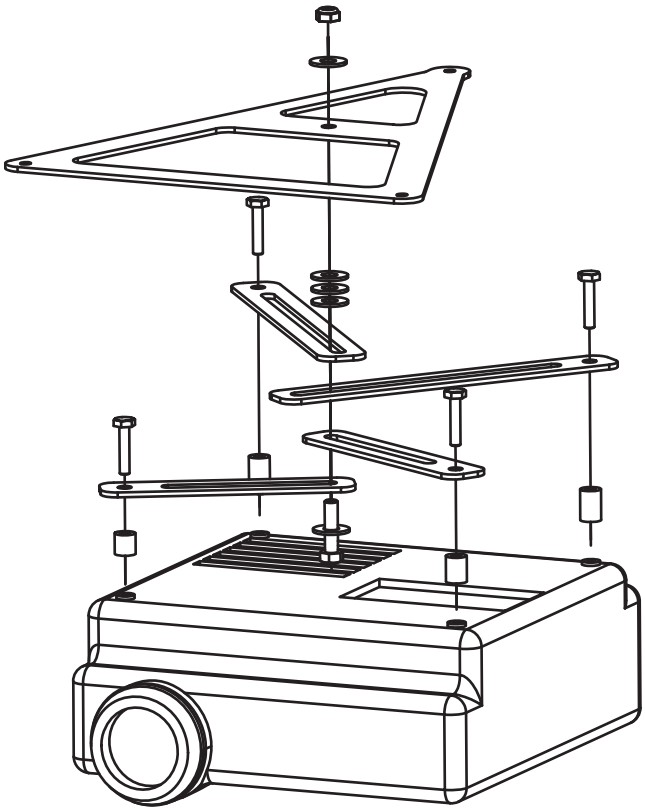

Extra Adjustment

To adjust the amount of rotation, rotate the multiflip arms to strike the limit switches for either more or less rotation.

For additional adjustment, you can also bend the arms of the microswitches.

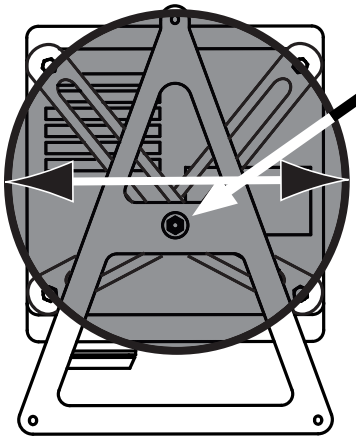

Minimum: 3" (7.6 cm)
Maximum: 13" (33 cm)

In order to use the universal mount, the mounting holes in your projector must be located within the area indicated by the circle.

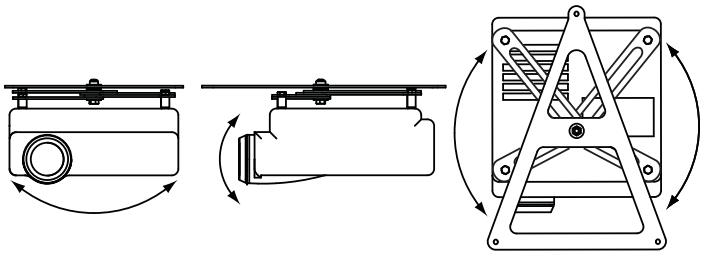

Roll ***Tilt*** ***Yaw***

Caution: Beware of pinch point.

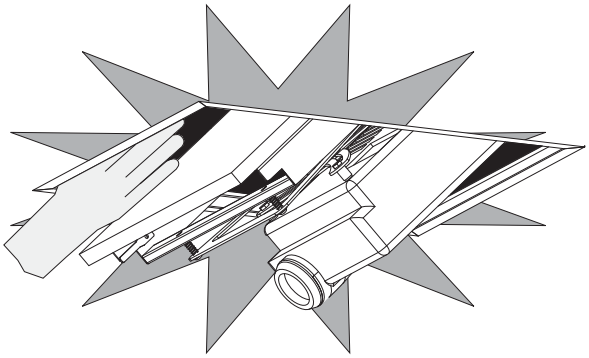

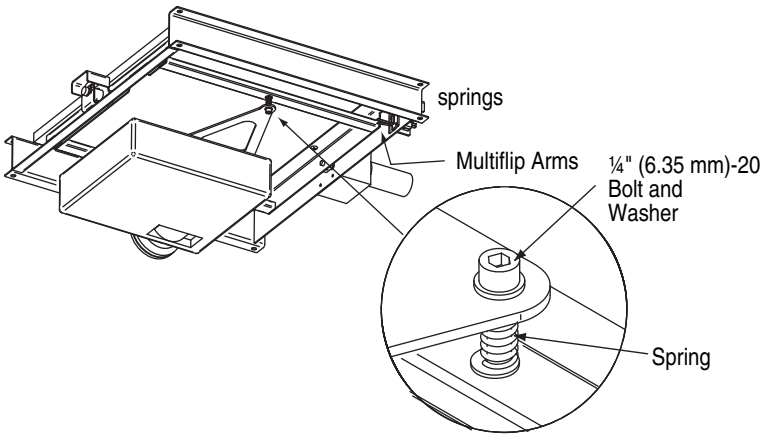

Detail: ¼" (6.35 mm)-20 bolts and Spring

Wiring Diagrams

Standard Switch Control

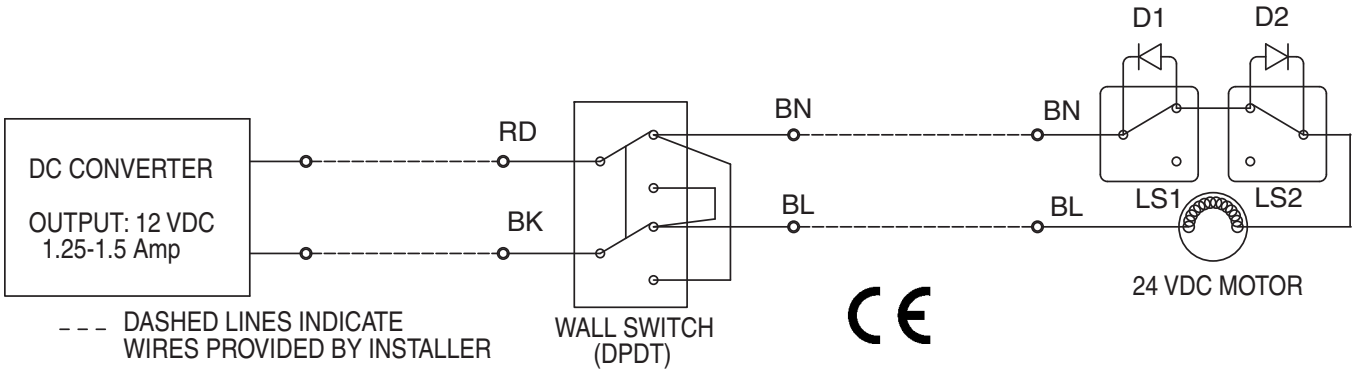

Please note: CE certification applicable on 220V units only.
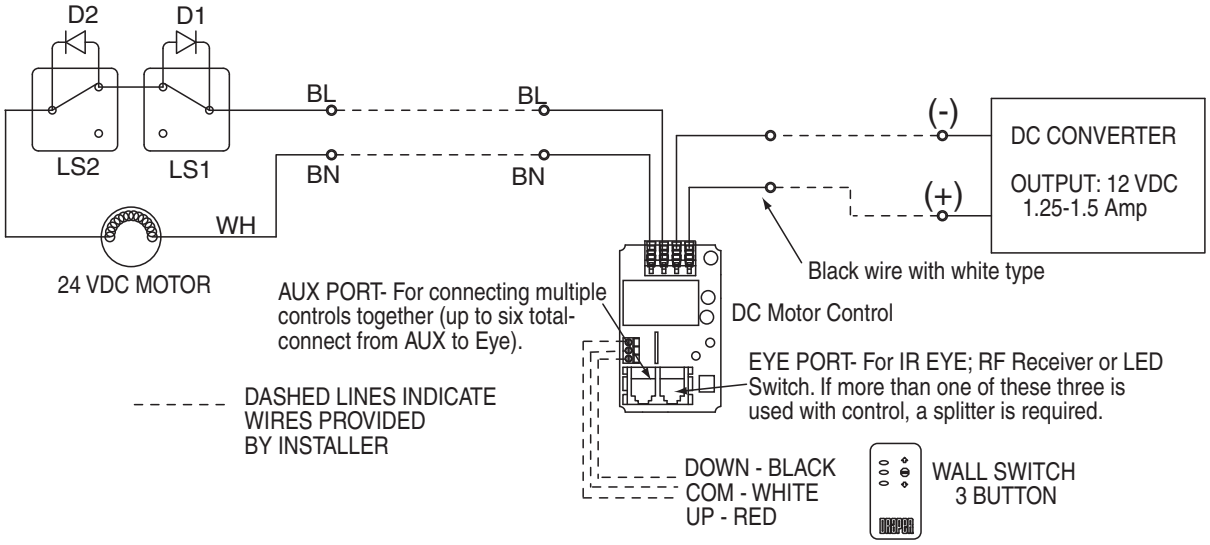
Optional Wireless (RF, IR), RS232 and IP Control