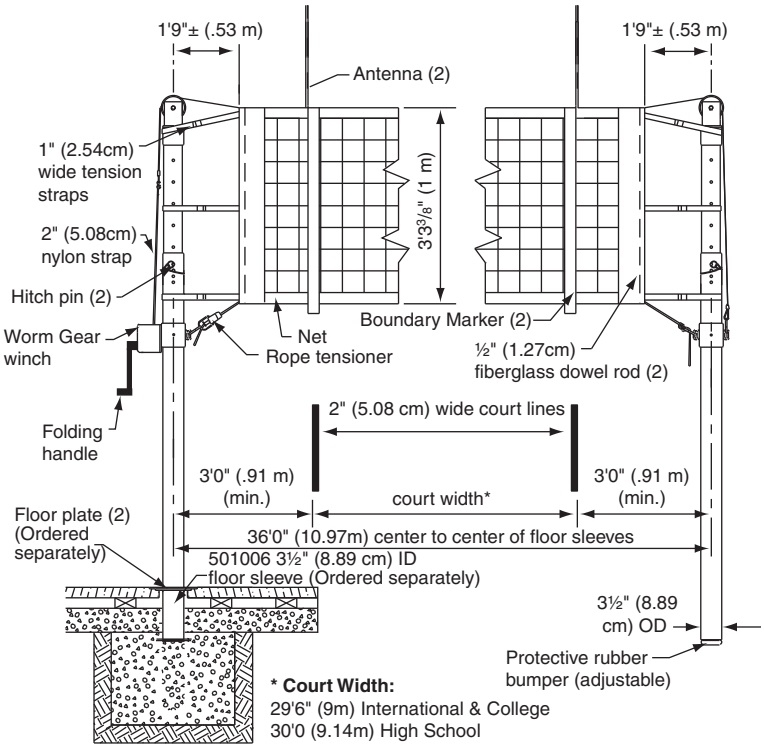

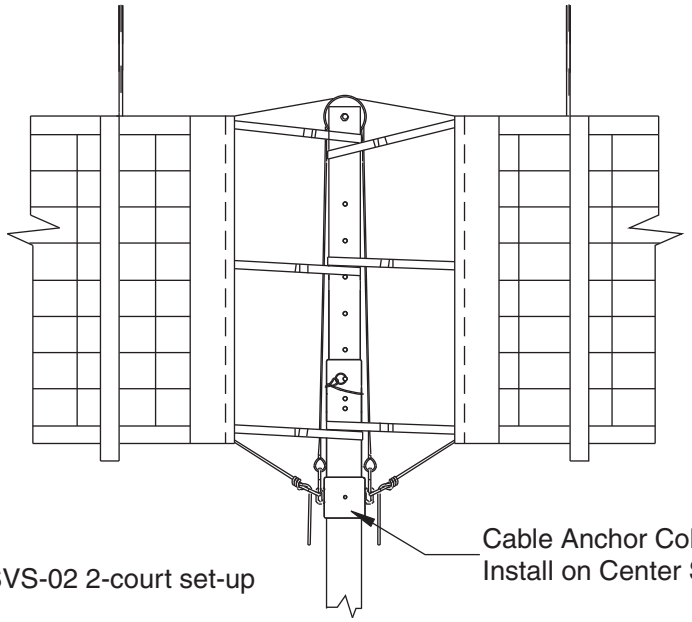
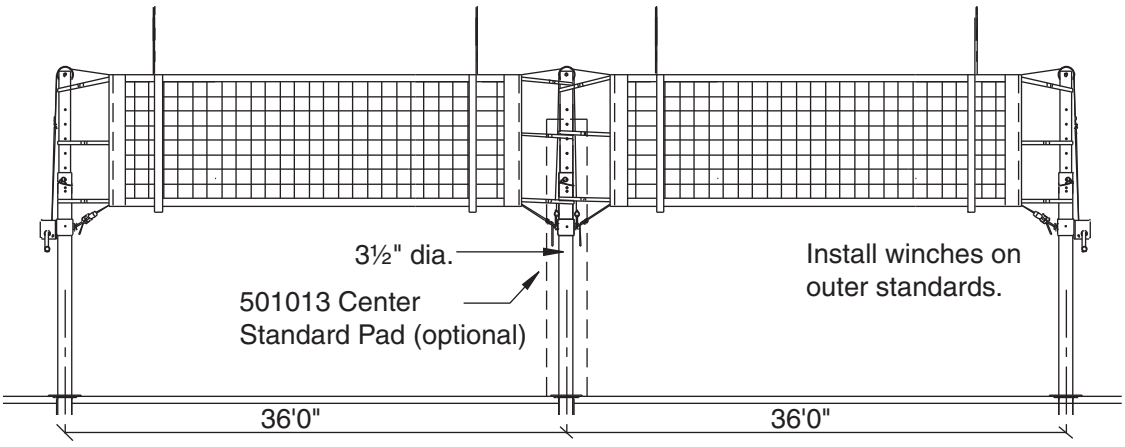
Typ. SVS-02 2-court set-up