# Installation Instructions
# LightBloc FlexShade—Large Hardware by Draper

## *Caution*

① Read entire procedure before installing. Keep instructions for future reference. The instructions are for LARGE HARDWARE.
② Please note: The screws provided are for use in the following materials: wood and thin gauge steel and aluminum frames. If you are installing FlexShade LightBloc into any other type of material, the installer needs to select and use an appropriate fastener for that type of material. These instructions are for installing FlexShade LightBloc using the enclosed hardware into wood and metal frames.
③ For Clutch-Operated units: If shades are to be installed in areas accessible to young children, be certain to use cord tension device and heed warning below.
④ Tools needed for installation: Screwdriver with flathead, phillips, and 1/4" nut driver attachments (magnetized, if possible), extensions, drill and 1/8" drill bit; carpenter's level; needle-nose pliers; Square; opaque caulk; and shims.
⑤ Use extreme care during installation to avoid scratching finish.
⑥ Controls may be shipped separately or in same carton as LightBloc.
⑦ LightBloc must be positively and securely attached to mounting surface.
⑧ Do not wire motorized units in parallel without written consent from Draper.

*Please follow installation guidelines carefully. Failure to do so invalidates warranty.*

## *LightBloc—Parts and Hardware*

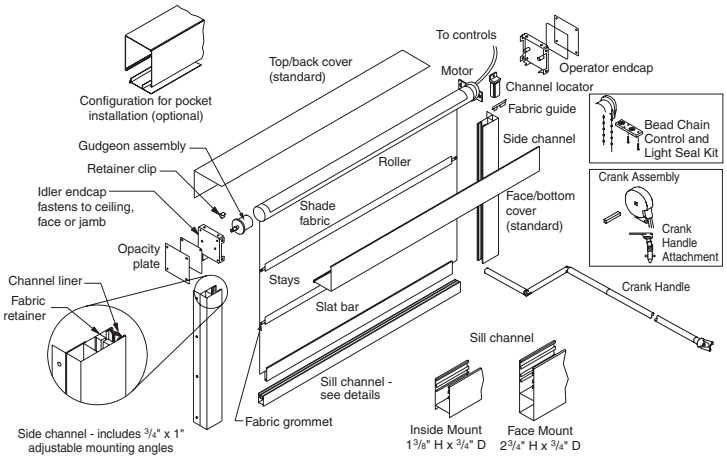


① Open cartons lengthwise. Remove all pieces from carton.
If the shade has a detachable crank handle, remove the universal joint and shaft/bracket assembly by removing 2 screws from the bottom of the endcap (Fig. 1). Save universal joint & screws.
② Remove face cover from head box by pulling down and out on the bottom edge of cover near end caps. It will snap off (see Fig. 2). If this is a pocket installation, remove screws at endcaps. The bottom of the cover box snaps down and off at endcaps then slides out of slot in cover box (see Fig. 2).
③ Remove roller assembly from headbox. (NOTE: If unit is motorized with a crank override, skip this step. Roller assembly and head box assembly must be installed as a unit—the roller assembly cannot be removed without completely disassembling the head box.) Remove the black plastic retainer clip from idler end of roller and retainer clips from motor studs.

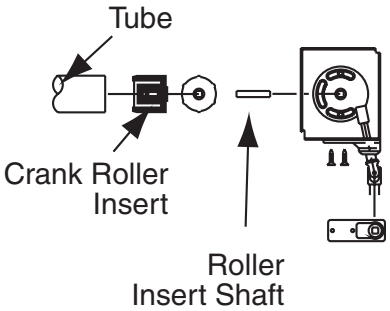


*Figure 1*

## *For the Safety of Young Children*

For Bead Chain Clutch-Operated units, *Be certain to install cord tension device to wall, jamb or sill using appropriate fasteners. Proper installation of cord tension device keeps loops from being easily accessible. If bead chain is not secured with cord tension device, young children can STRANGLE in bead chain loops. In any case,* ***clutch-operated shades should not be installed near cribs or playpens.***

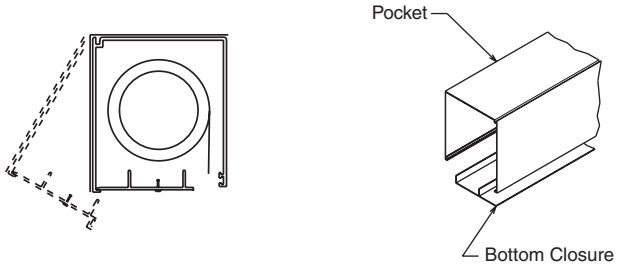


*Figure 2*

Save these clips to replace when re-assembling. Lift idler out of the bracket and slide pin (to the limit of its travel) into the roller to facilitate removal of the roller assembly. Remove roller assembly from the headbox (see Fig. 3).
NOTE: You may need to locate and drill a hole for the conduit connector (Conduit connector is not supplied) (see Fig. 4).

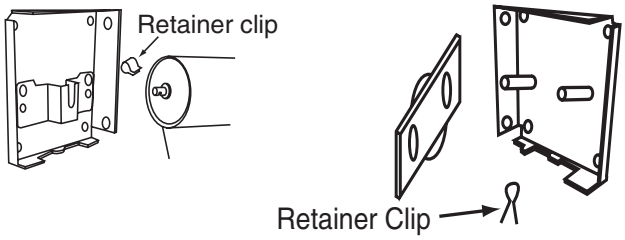


*Figure 3*

④ Verify dimensions of opening and refer to order for overall dimensions of the unit. Determine location of head box directly above and centered on the opening. It is critical that the head box is installed absolutely level (use shims and caulking if needed). Install head box assembly using appropriate fasteners through pre-drilled holes in end caps, then drill through cover for wall ceiling mounting (see Fig. 5).

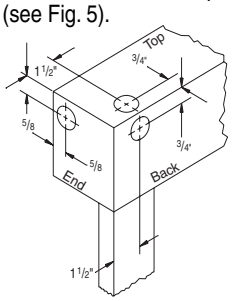


*Figure 4*

*NOTE: For motorized units, make sure POWER IS OFF before making any electrical connections. Use extreme caution when working with electric motors.*

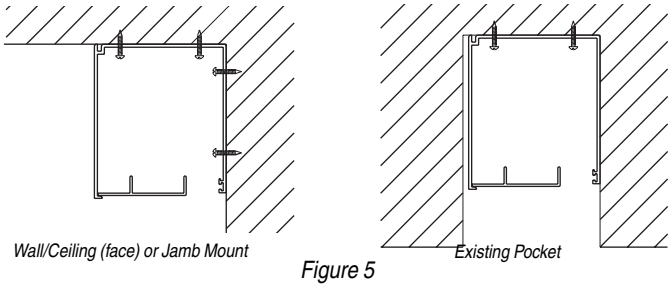


*Figure 5*

*If you have any difficulties installing or servicing your LightBloc FlexShade, call your dealer or Draper, Inc., (765) 987-7999 or fax (765) 987-7142.*


411 S. Pearl St., Spiceland, IN 47385 USA ▮ 765-987-7999
www.draperinc.com ▮ fax 765-987-7142



Copyright ©2010 Draper Inc. Form LightBlocFlexShade-Large_Inst10-R Printed in U.S.A.

⑤ Install side channels *(NOTE: Insure side channels, headbox, and sill channel are square).*

A. Install channel locator and fabric retainer in the top of each side channel then slide into place (see Fig. 6).

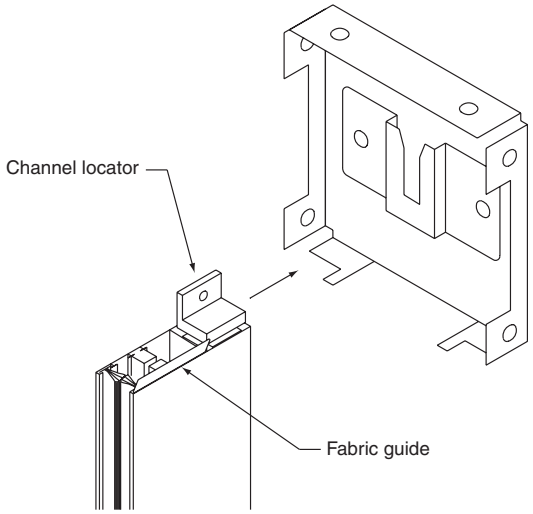


*Figure 6*

B. For face mount, side channel mounts on the surface of the wall or window mullion. Fasteners go through the side channels. Plug buttons should be used to cover holes (access and mounting holes will be pre-drilled) (see Fig. 7).

C. For inside or jamb mount, attach mounting angles to side channels. Install side channel with mounting angle toward window, if depth will allow, so it is not visible (it can also be installed toward the room). The bottom edge of the mounting angle must be mounted flush with the bottom edge of the side-channel. Fasteners will go through the mounting flange (see Fig. 7).

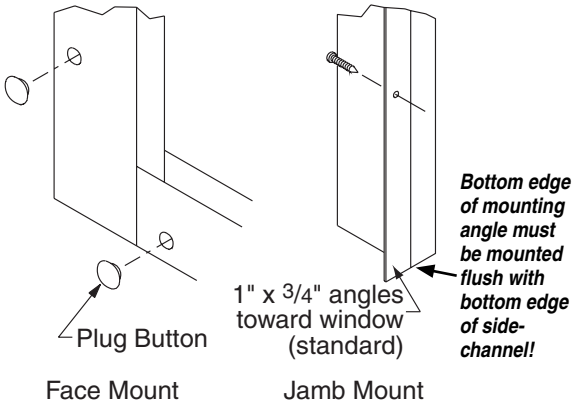


*Figure 7*

⑥ Install sill channel between side channels using appropriate fasteners (see Fig. 8). On some large LightBlocs, the sill channel is replaced by an angle. NOTE: Be sure of a centered and snug fit between side channels.

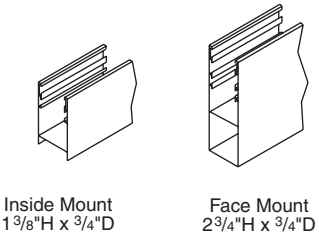


*Figure 8*

⑦ Re-install roller assembly by generally reversing procedures in step four. If you have a spring assisted clutch operator or a spring roller operator, the notch on the spring roller should be positioned down. The spring has been pre-tensioned in the factory.

⑧ For an ***electric operator***, complete electrical wiring according to national and local codes (see Wiring Diagram, Page 4). Install recessed wall switch using a three-wire 110-120V 60 Hz power line. Connect the motor cable directly to the switch.

***NOTE:*** *More than one motor should never be connected through a single switch without the aid of a relay system to provide separate contacts for each motor. See installation instructions and wiring diagrams which accompany each control system.*

⑨ Check shade fabric. With fabric and slat all the way up, pull the slat bar forward, out of the head box and in front of the side channels. Activate the operator (crank, spring roller, bead clutch, or electric) to completely lower the shade fabric. Repeat several times. With the shade fabric hanging in front of the side channels, check fabric hang. The shade fabric should be hanging straight and equally spaced between the outside edges of the side channels. If the fabric is not hanging properly, adjust the head box by raising or lowering one end of the head box to bring fabric into proper alignment. Operate the shade again to re-check fabric position. If functioning properly, run the shade up to fully open position and re-insert slat bar and fabric into side channels (see Fig. 9). If misalignment still occurs, correct by sticking a small (approximately 2") piece of cloth tape directly to the roller to affect the direction the fabric runs. Fabric running off to the left may be corrected by placing the tape on the right end of the roller beneath the fabric. This, in effect, makes that end of the roller larger, causing it to take up more fabric. If this is a non-electric operated shade, proceed to step 12.

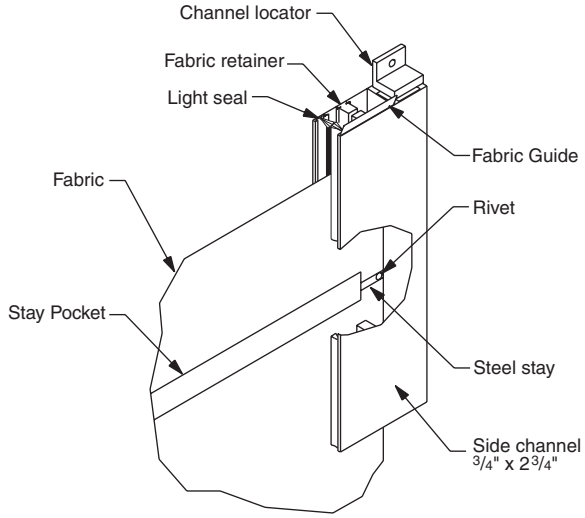


*Figure 9*

⑩ Adjust limit switches so the fabric can be completely drawn or retracted without the slat bar leading edge going beyond the plastic fabric guides located at the upper end of each side channel (see Fig. 10). Limit switches are pre-set, but some field adjustment may be necessary.

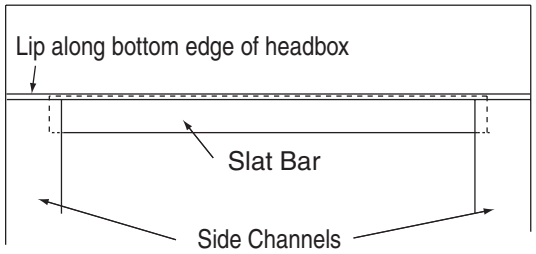


Figure 10

***NOTE: Do not allow slat bar to enter headbox.***

A. Fully depress both limit switch push buttons, then operate switch to make sure system works properly.
B. Raise shade to desired “up” stop position.
C. Set upper limit by depressing and releasing the proper push button (see Fig. 11).
D. Lower shade to desired “down” stop position.
E. Set lower limit by depressing and releasing the yellow push button (see Fig. 11).

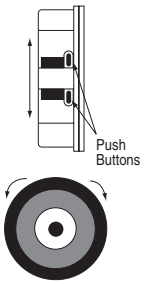


*Figure 11*

*NOTE: Limit switches can be set with a single motor switch on a test cord furnished by Draper, Inc. upon request. Each shade’s limit switch must be set if using group control system.*

⑪ After again checking operation, re-position side channels, if necessary, to properly adjoin the head box. Note that channels that are “drilled for jamb” with the adjustable mounting angles attached are designed to help keep the channels plumb and parallel in non-squared openings. The slots in the mounting angles with the side channel attachment screw allow for an adjustment of up to 3/8". This feature allows the channel to be correctly positioned while allowing the mounting angles to be fastened tight against the jamb (see Fig. 12). For outside mount side channels, there is no surrounding jamb, so proper positioning is easier. Install all fasteners in side channels, being careful to keep channels square to the head box and parallel to each other. After checking fabric alignment and channel positioning, return shade to full open position and re-insert the fabric into the side channels. Be sure that the slat bar at the bottom of the fabric is exactly centered. Run the shade through several more cycles to confirm proper operation.

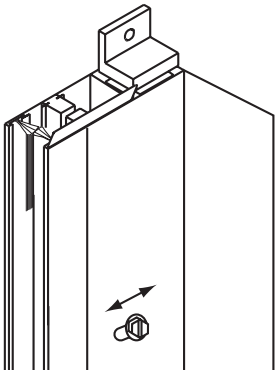

*Figure 12*

⑫ Re-attach cover to head box.

⑬ For bead-clutch operation, uncouple the chain at the connector so that the chain can be dropped through the two large holes in the bottom of the face cover that line up below the clutch. Hook cover top over top lip on top cover and swing down. Check alignment then snap on at end caps. If this is a pocket installation, re-attach bottom closure to pocket. Slide the length of the bottom cover into the slot on the head box, then push up and snap on at end caps. Attach at end caps using screws removed in step 3. For an electric or spring operated shade, proceed to step 15. For a bead clutch operated shade, the two ends of the bead chain can be threaded through the holes in the bead chain light seal and the light seal can be attached to the bottom of the cover box (see Figure 13).

Reconnect the chain and run the shade to the fully down position. Using a pair of pliers, attach one of the stop balls to the very top of the exposed front portion of the chain. CAUTION: Be careful not to distort the ball with the pliers. (These balls cannot be easily removed once put on.) This will be

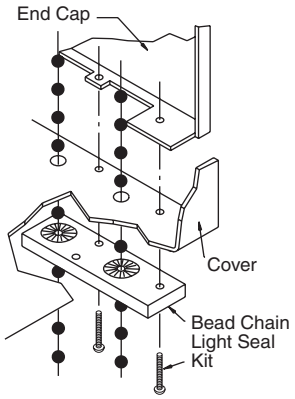


*Figure 13*

the down stop. Next, open the shade to the fully open position—the slat bar will be all the way up but still fully visible and not entered into the headbox (see Fig. 12). Attach the other stop ball to the very top part of the back sec tion of the exposed chain. This is the up stop (see Fig. 14).

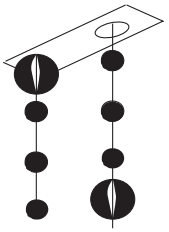

*Figure 14*

⑭ **For Bead Chain Clutch-Operated units:** install cord tension device to wall, jamb or sill so that the bead chain is held taut enough that children cannot pull it away from the wall or fit their head into the loop. ***See safety warning on page 1.***

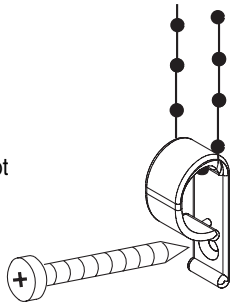

*Figure 15*

⑮ Check shade operation.

⑯ For spring roller operation, attach bead chain to slat bar and catch to sill channel. To operate shade, pull down, locking in place using the bead chain (see Fig. 16).

***NOTE: Opaque caulking around perimeter of cover, side channels, and sill may be necessary for complete light block—especially for jamb mounts where window openings are not square.***

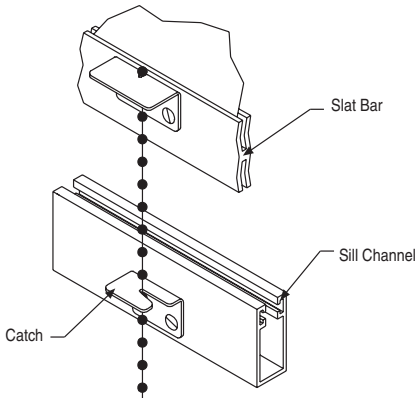


*Figure 16*

## *Cleaning and Maintenance*

Please Note: See back page for maintenance and cleaning instructions.

## *Cleaning and Maintenance*

Idlers on motorized shades may occasionally need lubrication. If lubrication is required, apply a small amount of a lithium based grease direct to the idler pin.

Most of Draper's standard fabrics may be cleaned at the window by vacuuming with a soft brush attachment. They may also be cleaned by using a sponge or soft cloth and mild solution of warm soapy water. A dishwashing liquid, such as Ivory liquid, is recommended. A clean dry cloth is recommended for the metal finish. ***Exceptions are Flocké, Roc-Rol and Phifer SW7000 fabrics, which must be cleaned with a dry art sponge.***

## *Single Shade Wiring Diagram*

For multiple shades or low voltage wiring, consult diagrams provided with control.

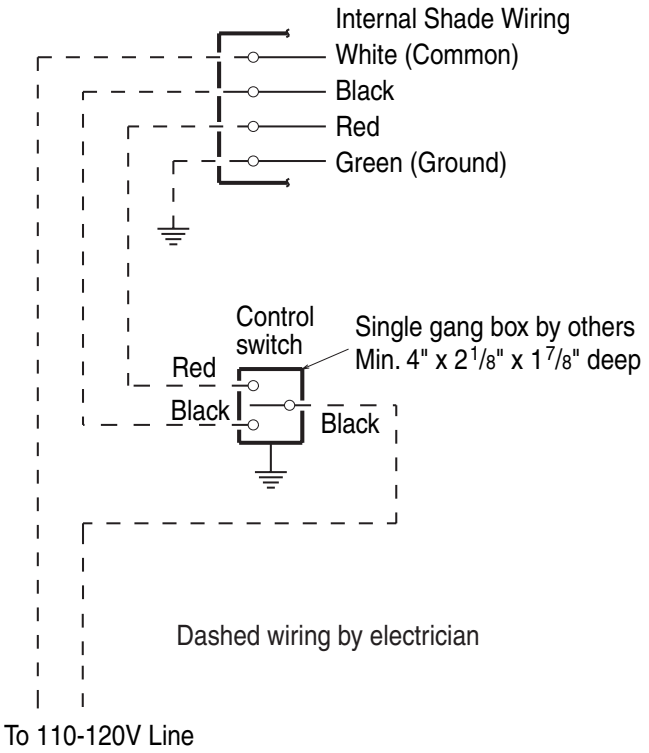


***NOTE: This wiring diagram is for standard right-hand motor placement and fabric from rear of roller. For left hand motor placement with fabric from rear of roller, Red becomes "Up" and Black becomes "Down."***
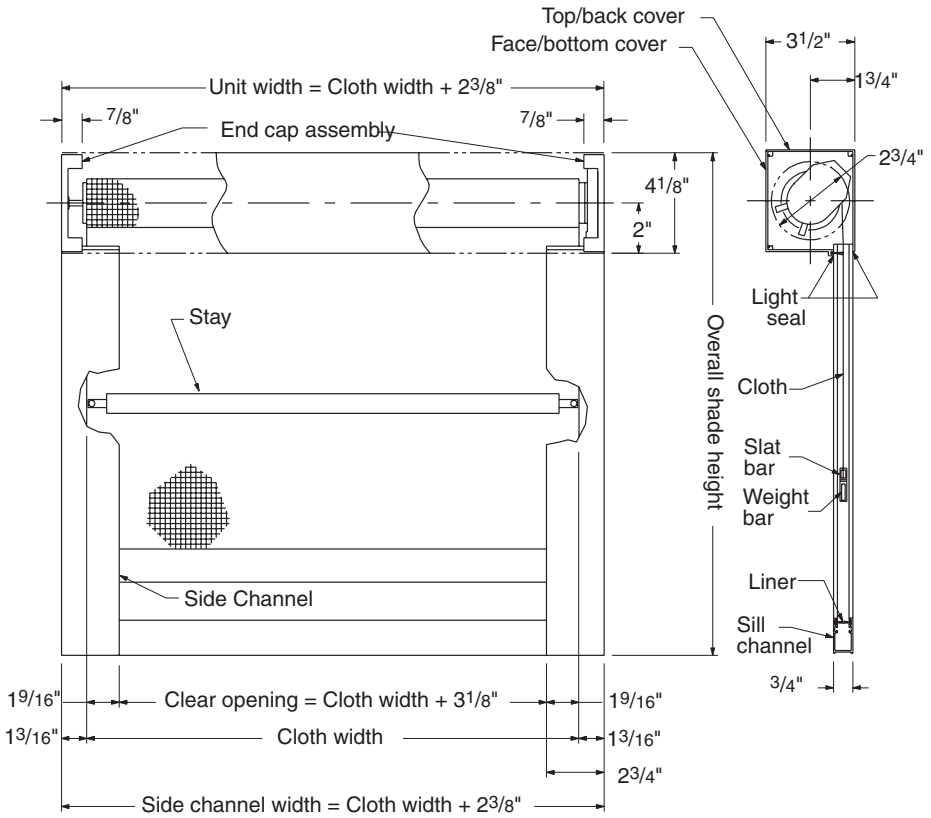
## *LightBloc Dimensions*