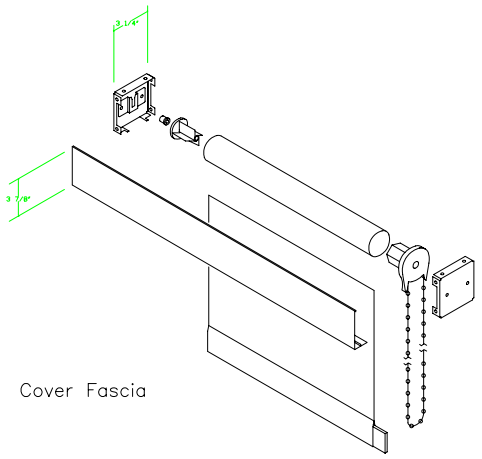

DRAPER Techmatic Operator

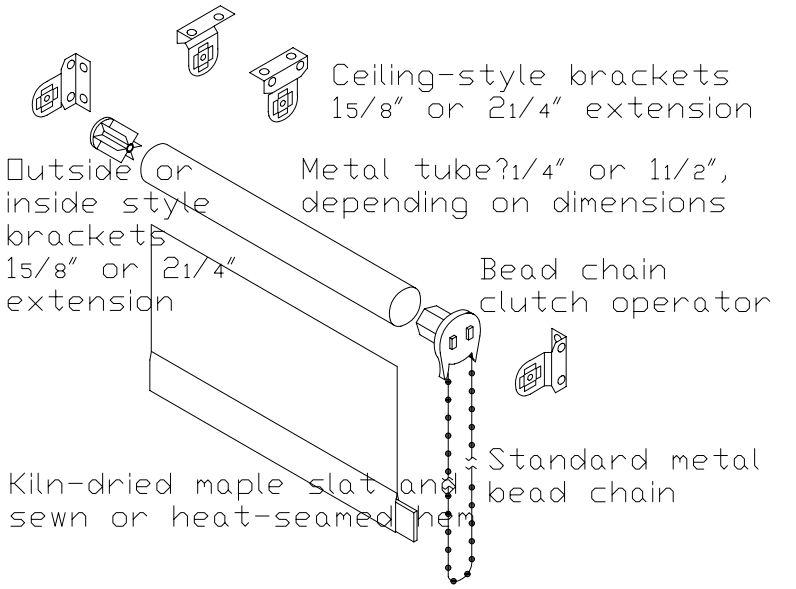

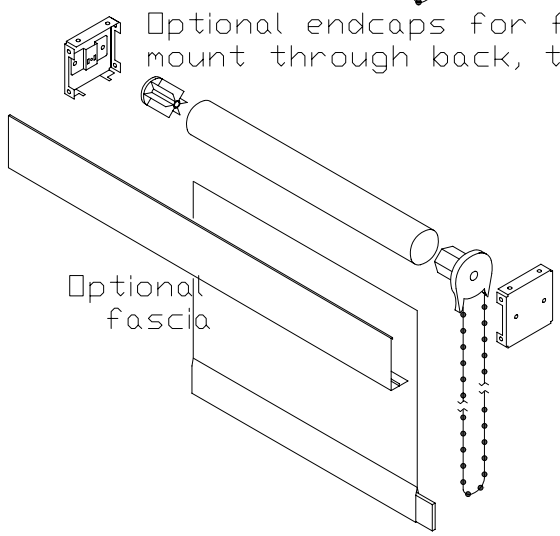

Note: SW3000, Vuetex and Room-Darkening fabrics standardly include heat-seamed slat hems.