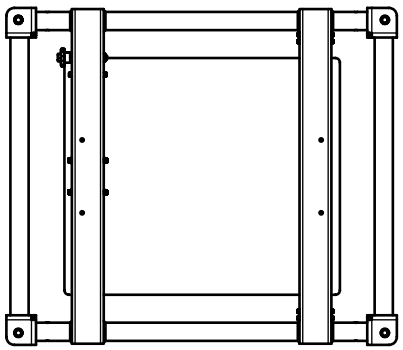

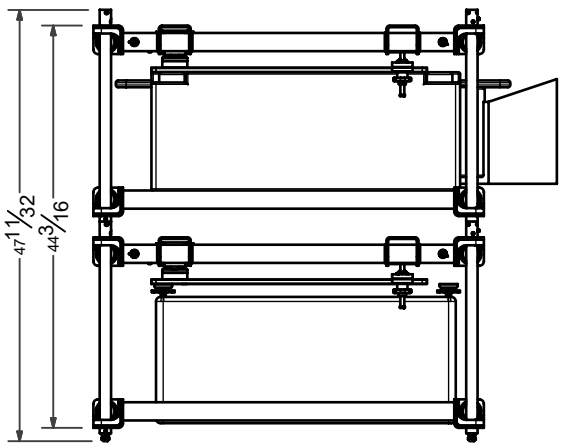

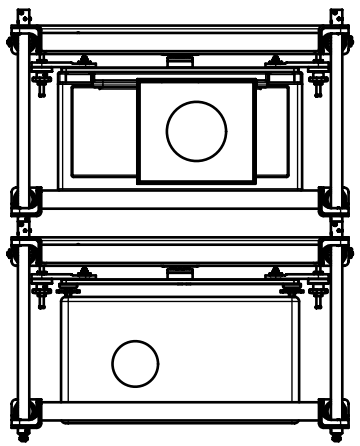

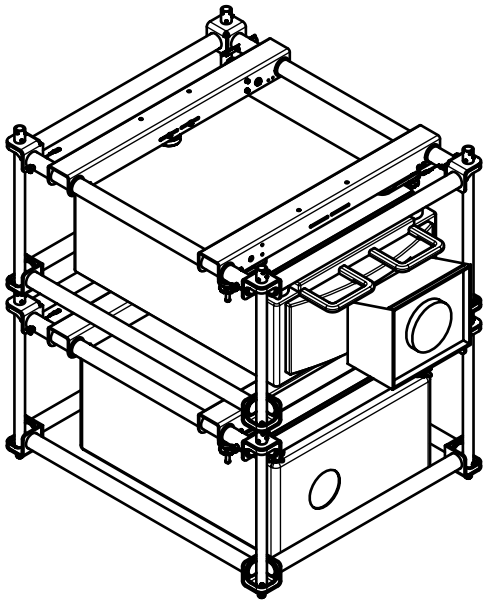

FLY CAGES STACKED

TOLERANCES UNLESS NOTED 2 PLC. DECIMAL: ±.01" 3 PLC. DECIMAL: ±.005" ANGULAR: ±1° FRACTIONAL: ±1/32"	DESIGNED BY: senochs	8/7/2018	DRAPER, INC. 411 S. PEARL ST. SPICELAND, IN 47385 www.draperinc.com
	DRAWN BY: senochs	8/9/2018	TITLE: ASSEMBLY, MEDIUM FLY CAGE STACKED
	CHECKED BY:		
	MFG APPD BY:		MATERIAL:
	ENG APPD BY:		
PROPRIETARY DRAWING NOTICE: THIS DOCUMENT CONTAINS CONFIDENTIAL, PROPRIETARY INFORMATION OF DRAPER, INC., IS THE PROPERTY OF DRAPER, INC., AND MUST BE RETURNED UPON REQUEST. NEITHER RECEIPT NOR POSSESSION THEREOF CONFERS ANY RIGHT TO OWN, REPRODUCE, USE, OR DISCLOSE IN WHOLE OR IN PART, ANY SUCH INFORMATION WITHOUT WRITTEN AUTHORIZATION FROM DRAPER, INC.			PAPER SIZE: B FINISH: NONE
			SCALE: NONE REV: 000 SHEET: 5 OF: 5 DWG NO. - PART NO. -