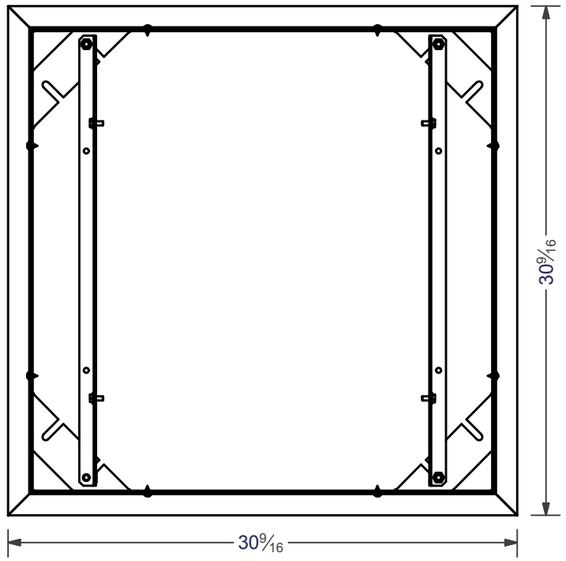

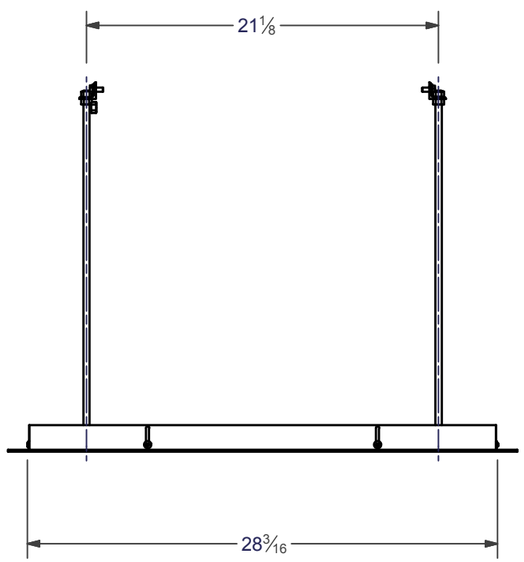

FRONT/BACK

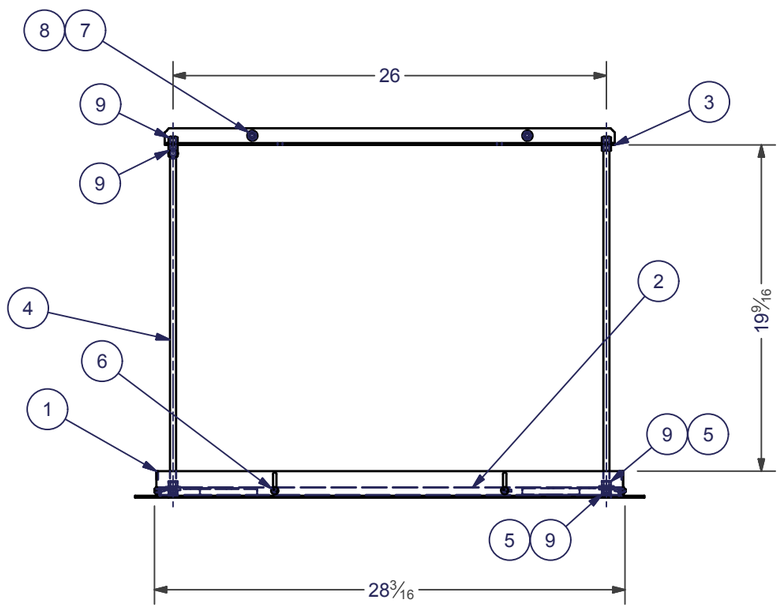

SIDE

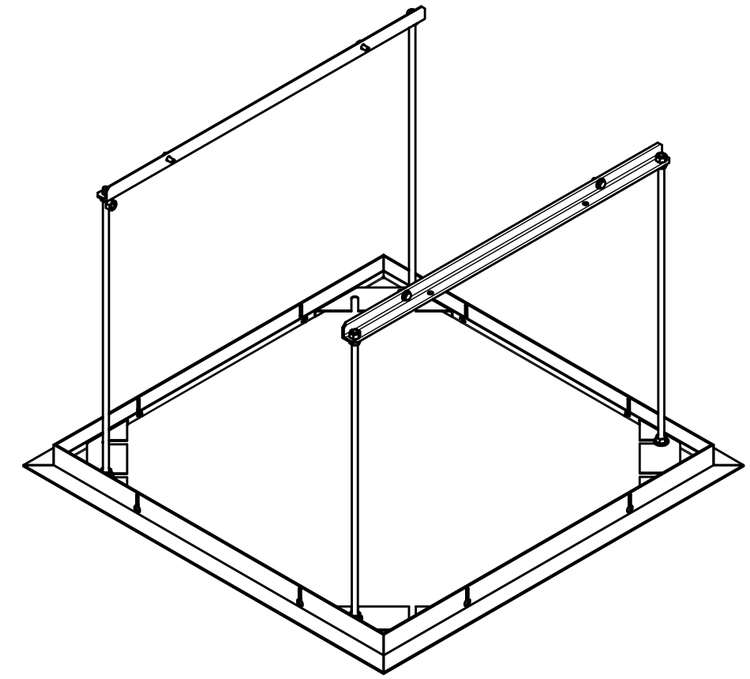

ITEM	QTY	PART NUMBER	DESCRIPTION
1	1	C028.616.07SA	FRAME, B CLOSURE TRIM
2	1	C044.194.07SA	Panel, Assembled B Closure
3	2	C002.924.07SA	BRACKET, B CLOSURE ATTACH
4	4	C077.037.49	Rod, Threaded 3/8-16 x 21 3/8" L Zinc
5	8	C013.050	Washer .375 I.D. x .875 O.D. x .064"TK GRD 2 Zinc Flat
6	8	C020.082	SCREW, 10-16 X 1/2" 6 LOBE TRUSS HEAD AB E-WHITE
7	4	C013.033	WASHER, 1/4" FLAT
8	4	C020.152	SCREW .25-20 X .625 HEX HD GRD2 ZINC CAP PART1
9	16	C018.027	NUT, 3/8-16 HEX GRD 2 NSF

TOLERANCES UNLESS NOTED

2 PLC. DECIMAL: ±.01"
3 PLC. DECIMAL: ±.005"
ANGULAR: ±1°
FRACTIONAL: ±1/32"

DESIGNED BY:	senochs	8/30/2010
DRAWN BY:	senochs	9/8/2010
CHECKED BY:		
MFG APPD BY:		
ENG APPD BY:		

PROPRIETARY DRAWING NOTICE: THIS DOCUMENT CONTAINS CONFIDENTIAL, PROPRIETARY INFORMATION OF DRAPER, INC., IS THE PROPERTY OF DRAPER, INC., AND MUST BE RETURNED UPON REQUEST. NEITHER RECEIPT NOR POSSESSION THEREOF CONFERS ANY RIGHT TO OWN, REPRODUCE, USE, OR DISCLOSE IN WHOLE OR IN PART, ANY SUCH INFORMATION WITHOUT WRITTEN AUTHORIZATION FROM DRAPER, INC.

DRAPER, INC.
411 S. PEARL STREET
SPICELAND, INDIANA 47385-0425
www.draperinc.com

TITLE: B Ceiling Closure Panel

MATERIAL:

PAPER SIZE: B | FINISH:

SCALE: NONE | REV: | SHEET: 1 OF: 1 | DWG NO. - PART NO. 300289

REV	DATE	ECO	BY	DESCRIPTION

REVISION HISTORY