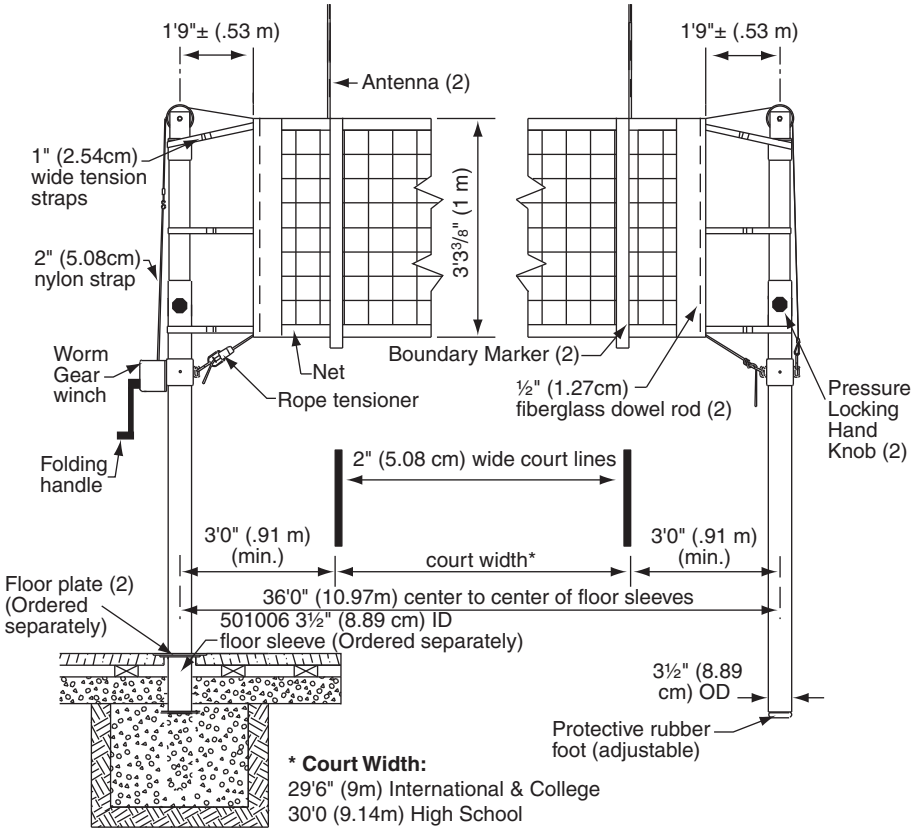

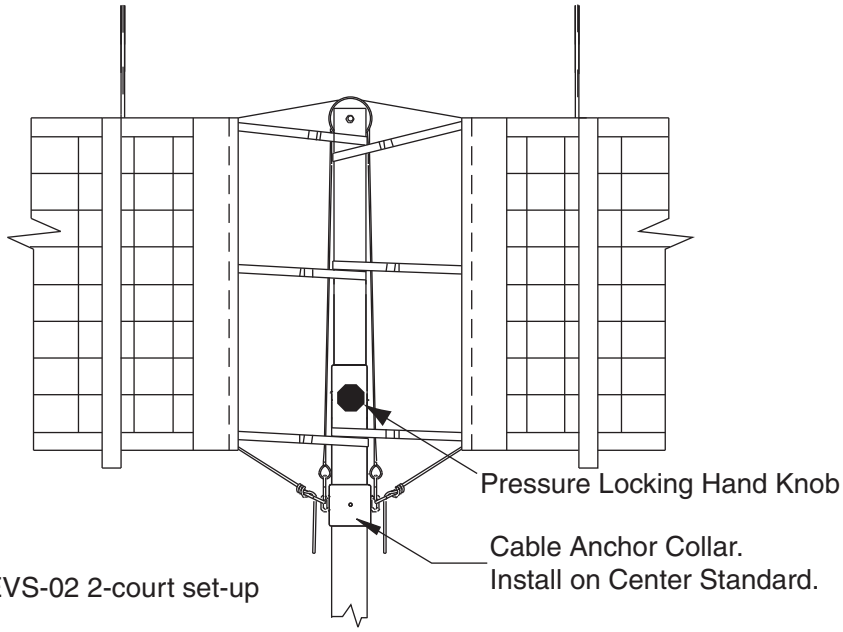
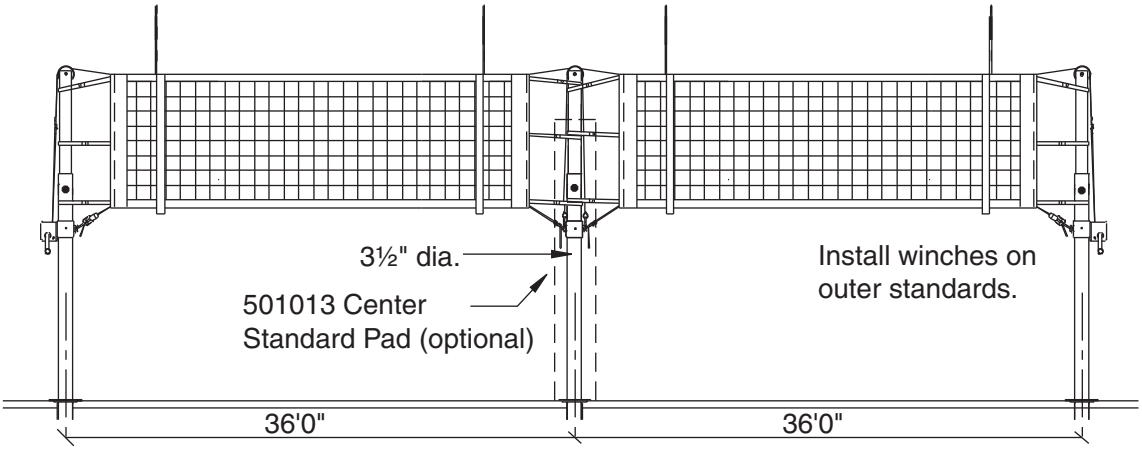
Typ. EVS-02 2-court set-up